LD Series Hand-Held Fiber Laser Marking Machine

LD50i II /LD50i-B II

LD Series second generation is finally launched. With a brand-new design, LD II Series is much lighter than the first generation - only 8KG weight (battery version 8.8KG). Built-in high-speed galvanometer scanner in small size, it has features of fast speed and accurate positioning. Long lifetime and maintenance-free, this hand-held laser marking machine is the industry's most complete handheld fiber laser marking and engraving system.

The standard configuration of the hand-held laser marking machine allows for many different options to meet any production need. It can be moved easily for convenient operation from any location and is capable of marking equipment and materials that would not fit into traditional marking systems. It can be widely used in industry of electronics, food, construction, hardware, auto-parts, etc. User can create characters, part numbers, logos, graphics, and barcodes and print them out.

Features

- Fiber beam delivery with integrated optical isolator
- Support TCP/IP protocols
- Extremely lightweight and equipped with a handle for increased portability
- 50mm x 50mm and 100mm x 100mm marking area for option
- Compact design, easy to move
- Built in touch screen display for easier operation
- Air cooled, no need for a water chiller unit
- Power consumption is significantly less
- NO maintenance, no consumables

LD SPECIFICATIONS

Specification	LD50i Ⅱ	LD50i-B Ⅱ
Case material	Engineering plastic	
Laser type	Fiber laser source	
Laser power	≥50W	
Laser wavelength	1064nm	
Maximum pulse energy	1.1mJ	
Frequency range	30-60 kHz	
Scanning method	High-precision two-dimensional	
Mark speed	≤7000mm/s	
Control system	Highly- integrated motherboard, 7-inch touch screen, Linux system	
Cooling system	Air cooled	
Type of marking line	Dot matrix and vector	
Reflector size	Standard size：8.5mm	
Marking range	Standard：50mm×50mm or 100mmx100mm	
Positioning method	Red light positioning	
Lines of marking	No limit within the marking range	
Marking speed	650 characters/sec (the specific speed is related to product material and printing contents)	
Fonts	Simplified Chinese, Traditional Chinese, English, Korean, Russian, Arabic numerals and other standard font libraries	
File format	BMP/PNG/JPG/JPEG/GIF/PBM/PLT (PLT is recommended)	
Code type	CODE39, CODE128, CODE126, EAN13, PDF417, 01CODE, QR, AZTECCODE, DM, GS1DM, DOTCODE, HANXINCODE, etc	
Power supply	220V	Battery 12000mAh
Power consumption	≤300W	
Battery run time	/	At 22℃: 5.5 hours
Full charge time	/	4 hours
Weight	8kg	8.8kg
Over-voltage category	Ⅱ	
Working condition	0-40℃, 30 -85 RH (no condensing)	

Dimension

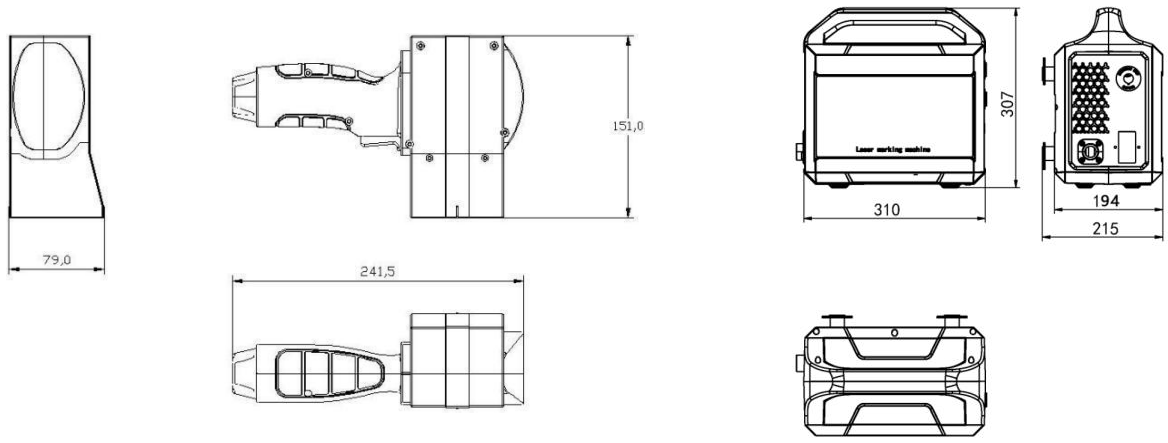

Tel: 86-20-87269462 E-mail: sales01@suninelaser.com Website: https://www.suninelaser.net