SUNINE

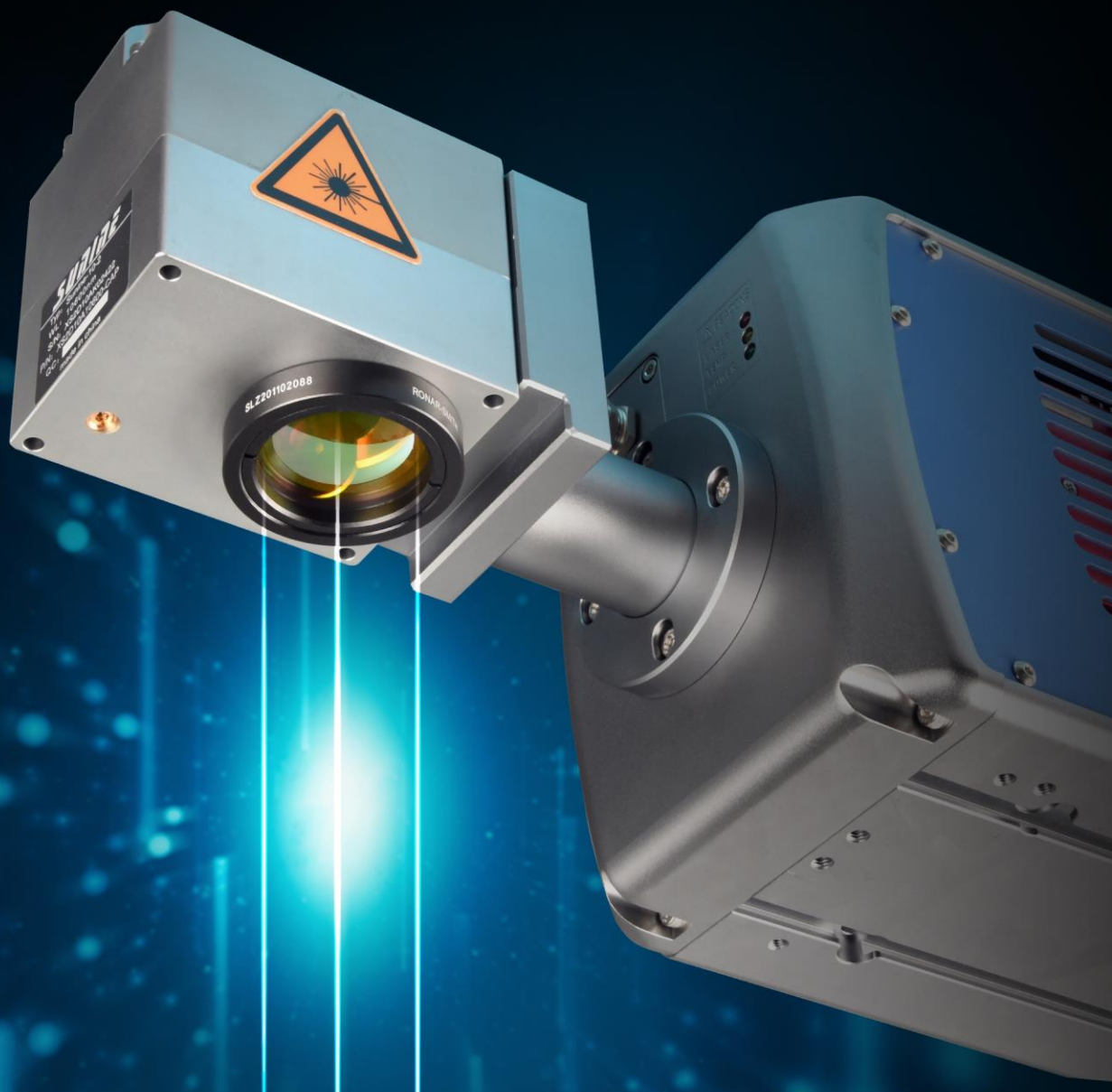

SUNINE LASER

CO_2 LASER MARKING SYSTEM

V Series On-The-Fly Laser Printer

Beyond Your Expectations

Laser marking & coding solution provider

Thanks to extensive experience in laser coding and a deep knowledge of how laser sources perform on materials, SUNINE is able to offer you the best solution for laser marking & coding.

SUNINE V series CO_2 laser marking system can truly meet your coding requirements.

Long-Term Operation Stability

- Sophisticated parts for machine, say no to substandard products
- Power-on and ready-to-use, zero maintenance cost
- Self-developed software ensures stable performance without any faults

Easy-To-Operate

- Smart touch screen panel
- System operation is easy to use
- Support various languages, one-button marking

Born For Efficiency

- Draw line speed up to 18000mm/s
- Standard and customized communication protocols
- High performance self-developed smart chip set can quickly process huge data and complex graphics.

Capability of Integration

- Light-weighted body made of high-density materials
- High-transmitted fused silica field lens ensures high stability
- Various working distances are available to adapt to all kinds of production environments, making production line integration more flexible

APPLICATION

Hardware

Pharmaceutical

Cosmetics

Chemicals for daily use

Domestic appliances

Food

Electronics

Beverage & Dairy

Tobacco

Jewelry

30W 60W 100W 150W Different Power Classes High-Performance CO_2 Laser Marking System

All laser marking systems are easy, convenient and safe to operate

SUNINE chooses high quality metal RF CO_2 laser source and advanced galvo scanner for V series laser marking system, which provides customers with high efficiency and excellent permanent coding results. The marking system features a long lifetime, a high electric-optical conversion rate, low energy consumption, and zero maintenance.

Seamless Operation Technology

SUNINE marking systems interact in a harmonious, seamless manner, which makes users believe that they are operating as a single system. The advanced touch-panel with high pressure sensitivity has the characteristics of simple operation and high durability.

Increased Productivity

SUNINE laser marking systems are available in 4 basic types of laser so customers can find the ideal machine for any material. They can be integrated in production line at speed up to 18000mm/s and work stably for a long time even in harsh industrial conditions. No need any ink or solvent, zero consumables.

Compact Design

The special compact design of SUNINE laser marking system allows to move to any location easily for convenient operation and can be installed in small space.

Laser Head

High-quality laser source, fused silica field lens and smart red-light positioning system ensure the high-quality laser coding

Flexible Mount For Scan Head Rotation In 720 Degree Steps

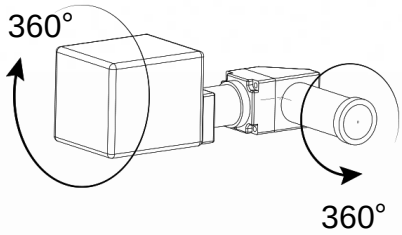

Compact Design

Ideal for use in a flexible environment

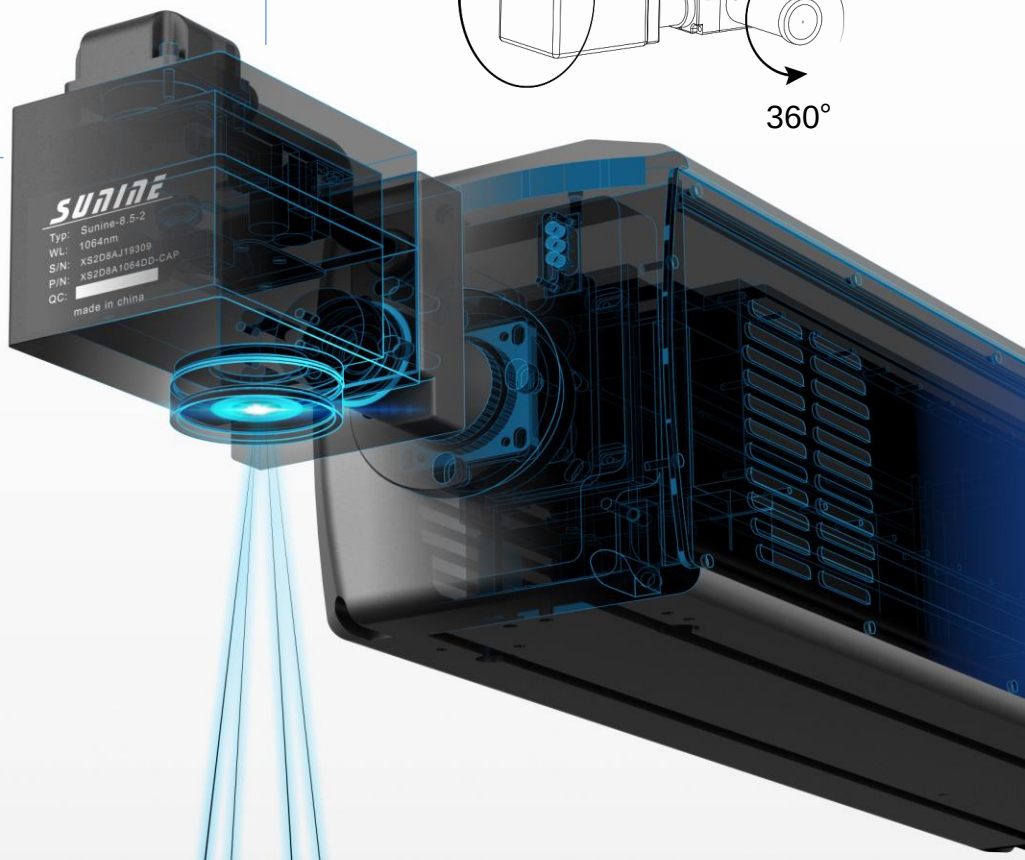

User Friendly

Self-developed smart touch panel control system for easy operation

High Speed

Marking speed up to 18000mm per second

High Accuracy Laser Control

Not only can it be applied to all kinds of high-density materials, but also can print precision patterns on objects without any damages

Traceability

SUNINE traceability system offers the best traceability solution for each product

Large Marking Area

Special designed fused silica field lens with small size provides large scan field, which made the scan head smaller and easy to install in small space

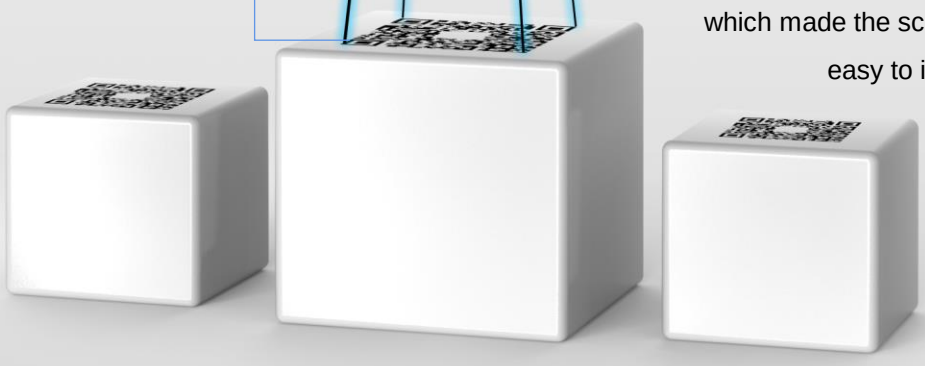

Excellent Beam Quality

Excellent laser beam with large focal depth and smart red-light positioning system guarantee that you will achieve fast marking and brilliant laser marking results.

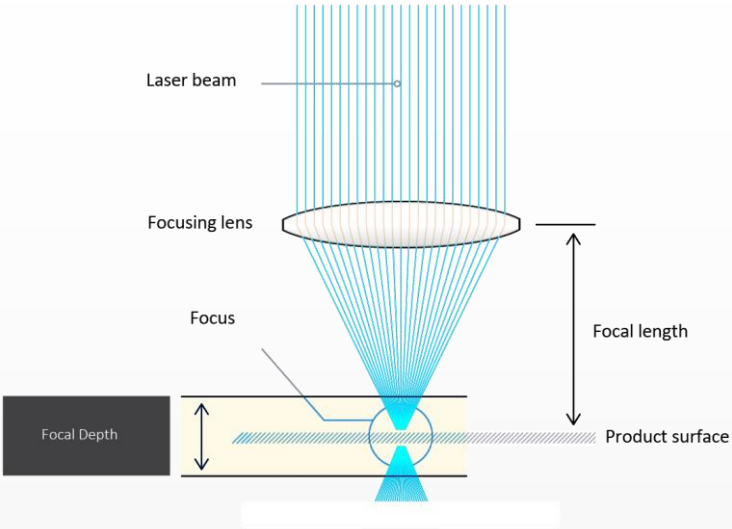

Intelligent, Fast, Efficient, Zero Consumables

SUNINE laser marking system with smart chip-based control system can be easily integrated into various production lines, dramatically increases the production efficiency and brings more benefits to customers.

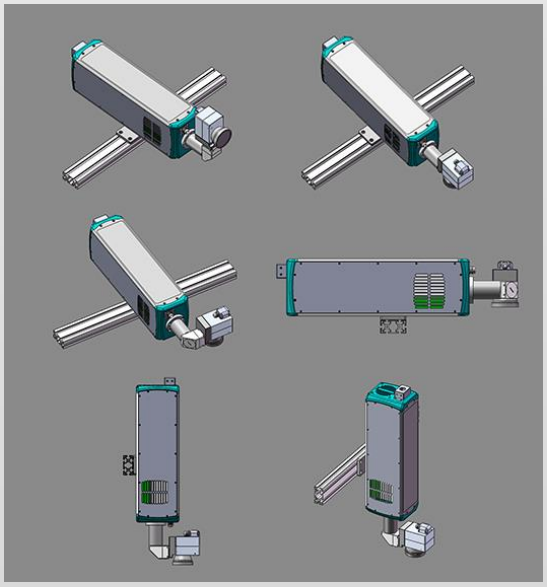

SUNINE NEW V5 Software

SUNINE self-developed operating software V5 is user friendly touch screen operation mode and specially designed for on-the-fly marking for powerful control, editing, communication and data collection.

High-End Laser Configurations

High Accuracy Laser Marking Control

SUNINE TOUCH CONTROL SYSTEM

V5 Linux smart touch-screen control system developed by SUNINE provides users with a flexible integration and easy-to-operate experience. It can also be connected to external devices for excellent laser markings.

SUNINE software supports various languages, code types and image formats. The special function allows the users to avoid the risk of missing markings.

The one-click file saving function allows users to save the marking parameters any time and monitor the marking status, which greatly reduce the time for users to adjust parameters, error debugging and coding. SUNINE laser marking machine has multiple interfaces for both on-site control and remote control.

The Best Marking Results Depends On Selecting Process of Laser Marking Systems

In laser marking process, the type of material, marking quality and marking speed requirements, wavelength and laser parts like scan head and field lens will all play a role in the optimum choice of laser system. Our laser experts will help you with professional suggestions.

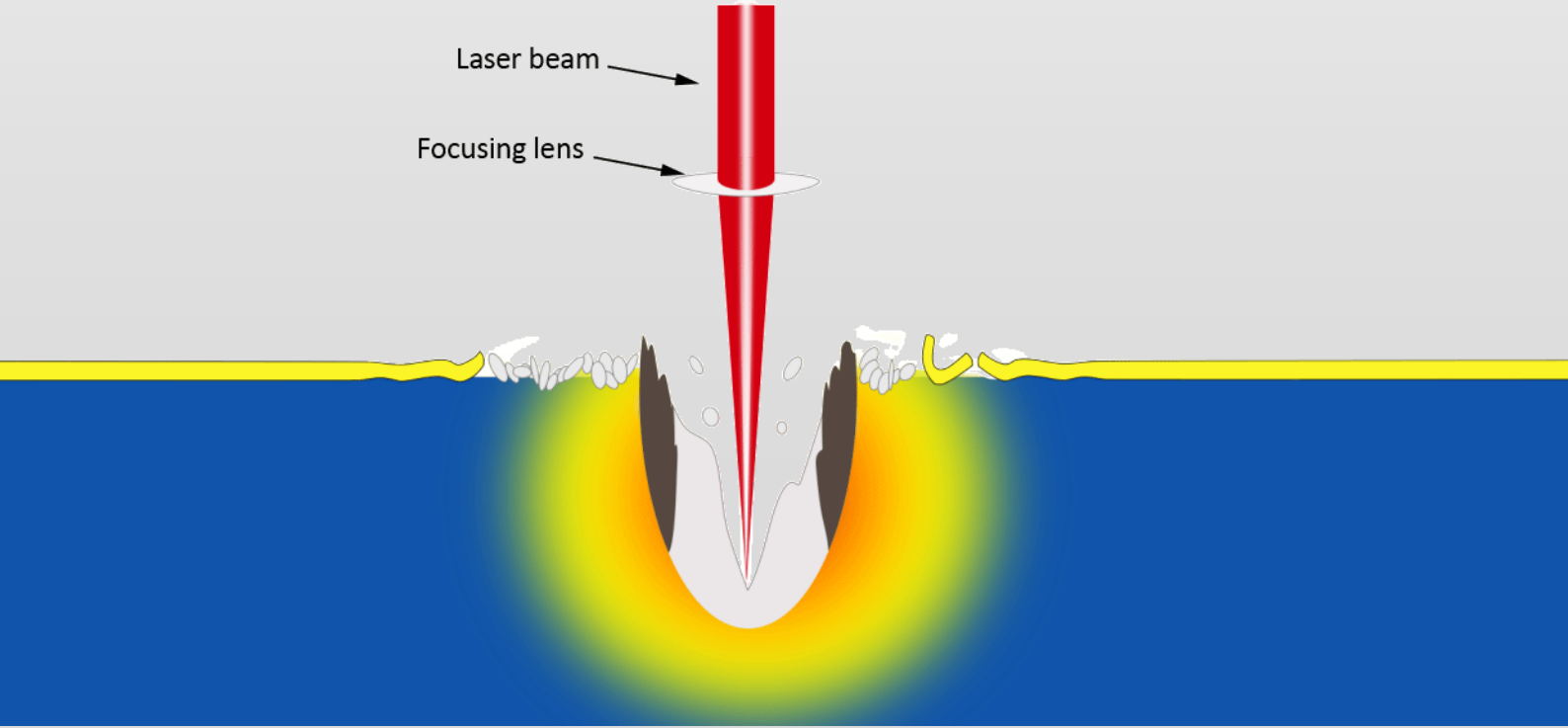

With over 10 years of experience in laser marking industry, SUNINE masters the core technologies and has rich knowledge on configurations between laser markers and applications. We have 4 series of laser marking systems for you to choose from, in addition to private customization to meet the specific requirements.

10.6μm wavelength gets well absorbed in applications that process materials ranging from thin paper to cardboard packaging. Extremely good print results are also achieved on glass products. This wavelength is the most common one available with CO_2 lasers and perfectly suits the majority of packaging applications.

10.2μm wavelength is ideally suited to marking on thin films and any types of packaging foils. Best results can be expected on painted films and foils with a thin ink layer on top. Packaging materials which absorb this wavelength very well and therefore generate the best CO_2-Laser print quality are PE, HDPE, LDPE, PP, OPP, OPA, PA, PMMA, POM, PUR, ABS and PVC.

9.3μm wavelength perfectly matches for the head absorption of plastics like PET (Polyethylene Terephthalate), allows marking on plastic surfaces by smoothly melting the surface layer without creating pinholes or cracking the inner structure. This is the ideal solution for the family of polyesters of thermoplastic resins. PET is wide-spreading in the beverage industry and is mostly used for producing bottles.

Chemical for daily use

Food

Beverage

Tobacco

Pipes

Pharmaceutical

Wide Range of Applications

Specifications 30W / 60W

Model	30W	V300c / V310c	V302c / V320c	V303c / V330c
	60W	V600c / V610c	V602c / V620c	V603c / V630c
Machine material	Anodized Aluminum (Laser Head) & Stainless Steel (Control Unit)			
Laser type	Sealed metal RF CO_2 laser source			
Laser wavelength		10.6μm	10.2μm	9.3μm
Scanning method	High-precision 2-dimensional scanning method			
Marking speed	≤18000mm/s			
Main control	Highly integrated motherboard with 10” touch screen controller			
Operating system	Linux			
Cooling system	Air-cooled			
Type of drawings	Both dot matrix and vector			
Reflector size	Standard：30W: 8.5mm		60W: 10mm	
Mark field	Standard：90mm×90mm, maximum：450mm x450mm			
Positioning method	Red-light positioning and auto focusing			
Lines of characters	No limits within mark field			
Production line speed	0~300m/min (varies according to materials and printing contents)			
Language	Chinese Simplified, Chinese Traditional, English, German, Spanish, French, Italian, Japanese, Korean, Portuguese, Hindi, Russian, Turkish, Arabic, Persian, etc.			
Image format	BMP/DXF/PNG/JPEG/PLT/JPG			
Code type	Code128A, Code128B, Code128C, Code39, Code93, Ean13, PDF417, 01 Code; QR, DM, GS1-DM, AztecCode, HanxinCode, DotCode			
Power supply	220V / 50-60Hz (110V optional)			
Power consumption	30W≤1100W		60W ≤2000W	
Machine weight	30W-33kg		60W-44kg	
Laser head size	722mmX177mmX146mm		924mmX209mmX194mm	
Control box size	403mmX382mmX160mm			
Interfaces	RS-232C / USB2.0 / Ethernet, I/O			
Protection class of shell	IP54（laser printer head） (IP65 for whole laser head optional)			
Working conditions	0-45℃			

Specifications 100W / 150W

Model	100W	V1010i	V1020i	V1030i
	150W	V1510i	V1520i	V1530i
Machine material	Anodized Aluminum (Laser Head) & Stainless Steel (Control Unit)			
Laser type	Sealed metal RF CO_2 laser source			
Laser wavelength		10.6μm	10.2μm	9.3μm
Scanning method	High-precision 2-dimensional scanning method			
Marking speed	≤12000mm/s			
Main control	Highly integrated motherboard with 10” touch screen controller			
Operating system	Linux			
Cooling system	Water-cooled			
Reflector size	Standard：14mm			
Mark field	Standard：110mm×110mm			
Positioning method	Red-light positioning and auto focusing			
Lines of characters	No limits within mark field			
Production line speed	0~300m/min (varies according to materials and printing contents)			
Language	Chinese Simplified, Chinese Traditional, English, German, Spanish, French, Italian, Japanese, Korean, Portuguese, Hindi, Russian, Turkish, Arabic, Persian, etc.			
Image format	BMP/DXF/PNG/JPEG/PLT/JPG			
Code type	Code128A, Code128B, Code128C, Code39, Code93, Ean13, PDF417, 01 Code; QR, DM, GS1-DM, AztecCode, HanxinCode, DotCode			
Power supply	220V / 50-60Hz (110V optional)			
Power consumption	100W≤2000W		150W≤3500W	
Machine weight	Approx. 120kg		Approx. 120kg	
Laser head (100W/150W)	758mmX177mmX146mm		928mmX218mmX194mm	
Control box (100W/150W)	492mmX383mmX160mm			
Interfaces	RS-232C / USB2.0 / Ethernet, I/O			
Protection class of shell	IP54（laser printer head） (IP65 for whole laser head optional)			
Working conditions	0-45℃			

Dimensions

30W Laser Head

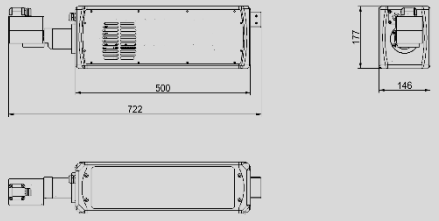

60W Laser Head

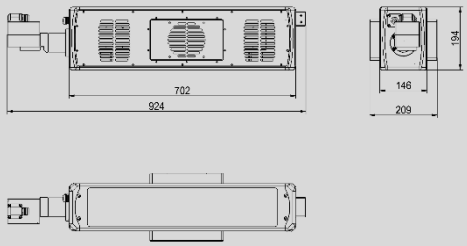

100W 150W Laser Head

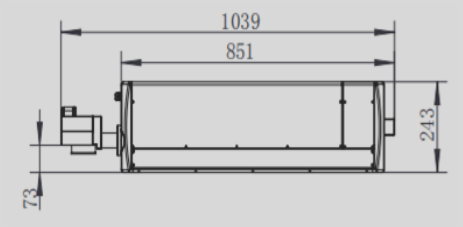

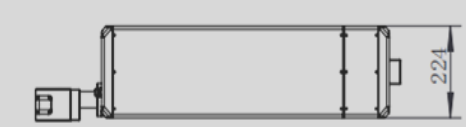

Control Unit 30W~60W

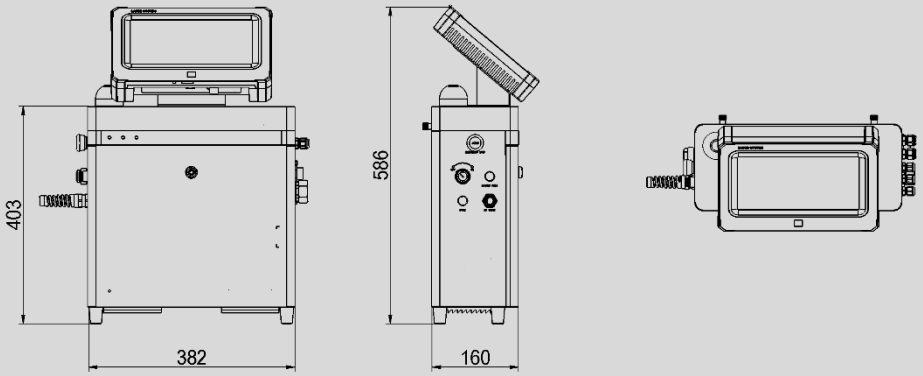

Control Unit 100W~150W

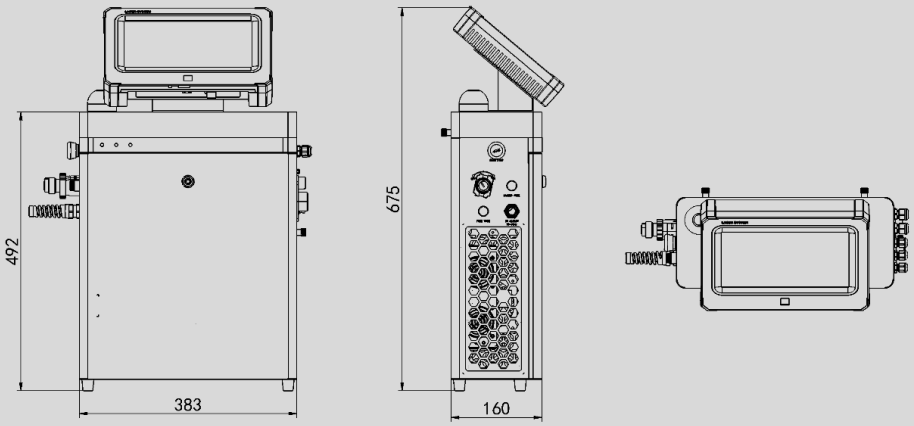

About Sunine

SUNINE is a leading solution provider and manufacturer of laser marking & coding technologies.

Since 2010	12% Market Share NO.1 in China
200 Employees	>40,000 Systems
ISO Company	CE/FDA Certificates

Brand Collaborations